2JM Series

2 JM 420 H36

Technical datasheet

JMET blower performance curves

Vacuum selection diagram curve

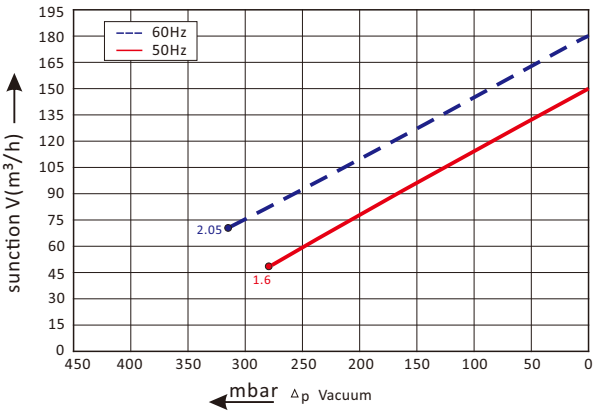

Compressor selection diagram curve

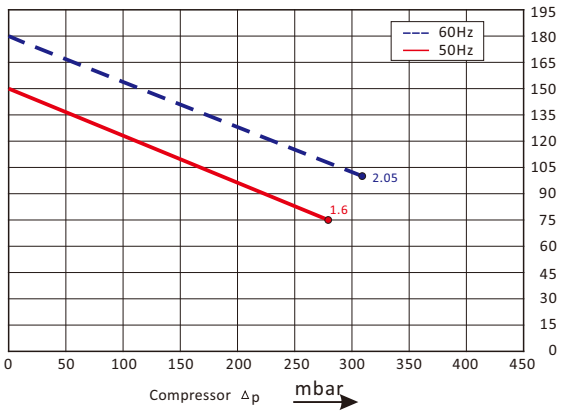

JMET blower installation drawing

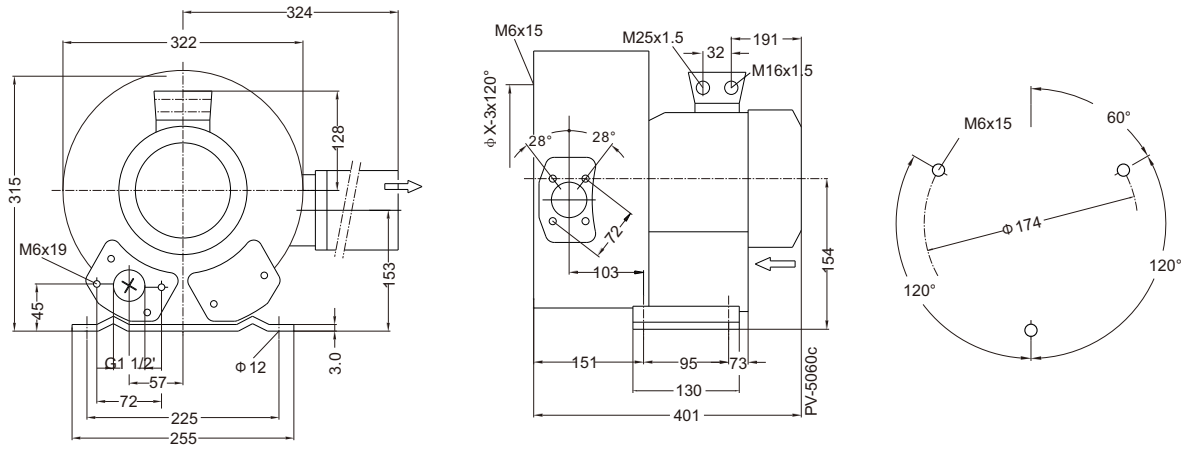

JMET blower parameter

Model	Frequency	Output	voltage	Current	airflow	pressure		noise	Weight
	Hz	KW	V	A	m³/h	vacuum mbar	compressor mbar	dB(A)	kg
3~ 50/60Hz IP54 INSULATION class **F**									
2JM 420 H**36**	50	1.6	200-240△/345-415Y	7.5△/4.3Y	150	-280	280	66	25
2JM 420 H**36**	60	2.05	220-275△/380-480Y	7.6△/4.4Y	180	-320	310	69	25

The performance curves of JMET blower is tested through below ways:
Under one atmospheric pressure, suck15℃ air and then you can calculate the data,of course allow 10% difference,and when the sucked air and surroundings temperature are not higher than 25℃,you still can get total pressure difference as the curves shows.