2JM Series

2 JM 720 H16

Technical datasheet

Kndson blower performance curves

Vacuum selection diagram curve

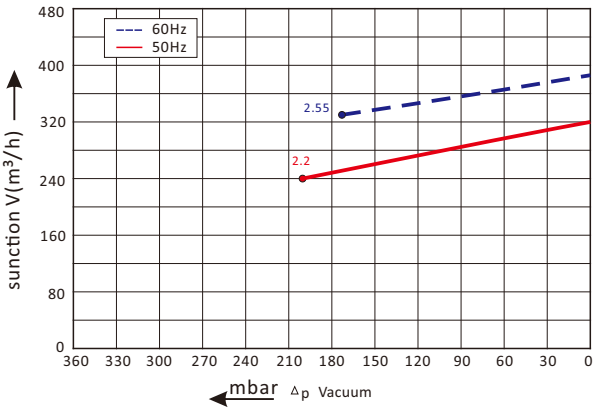

Compressor selection diagram curve

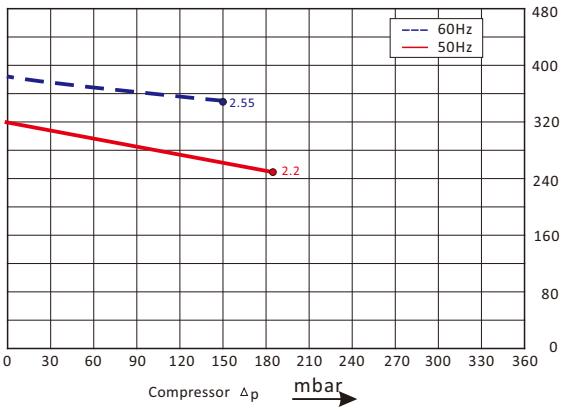

Kndson blower installation drawing

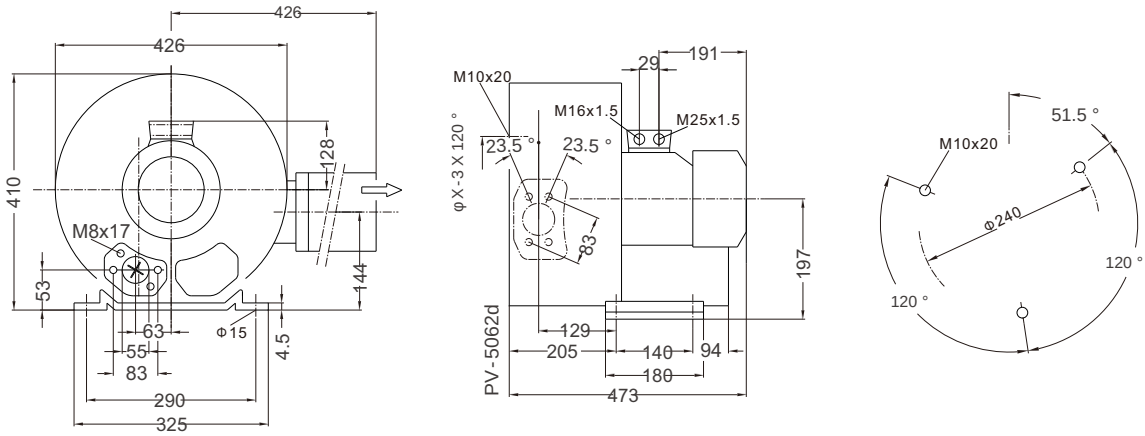

Kndson blower parameter

Model	Frequency	Output	voltage	Current	airflow	pressure		noise	Weight
	Hz	KW	V	A	m³/h	vacuum mbar	compressor mbar	dB(A)	kg
3~ 50/60Hz IP54 INSULATION class **F**									
2JM 720 H16	50	2.2	200-240△/345-415Y	9.7△/5.6Y	320	-220	210	73	43
2JM 720 H16	60	2.55	220-275△/380-480Y	10.3△/6.0Y	380	-170	150	76	43

The performance curves of Kndson blower is tested through below ways:
Under one atmospheric pressure, suck15℃ air and then you can calculate the data,of course allow 10% difference,and when the sucked air and surroundings temperature are not higher than 25℃,you still can get total pressure difference as the curves shows.