4JM Series

4 JM 210 H16

Technical datasheet

JMET blower performance curves

Vacuum selection diagram curve

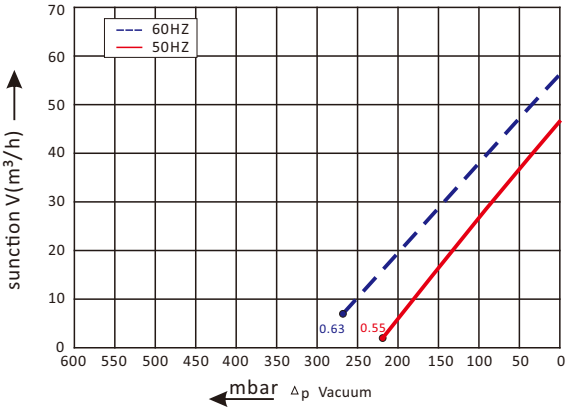

Compressor selection diagram curve

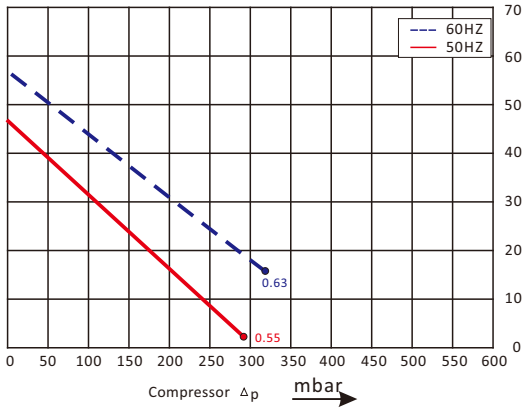

JMET blower installation drawing

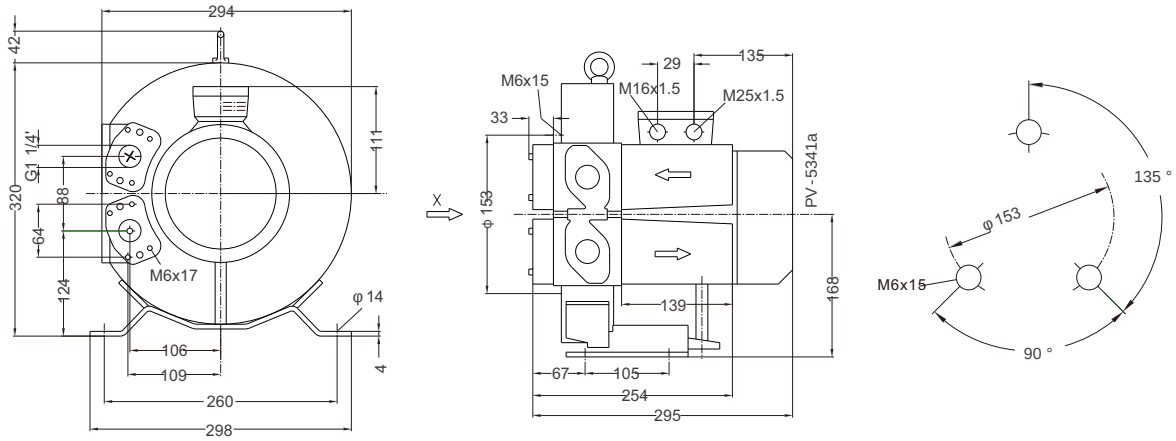

JMET blower parameter

Model	Frequency	Output	voltage	Current	airflow	pressure		noise	Weight
	HZ	KW	V	A	m³/h	vacuum mbar	compressor mbar	dB(A)	kg
3~ 50/60Hz IP54 INSULATION class **F**									
4JMD210 H16	50	0.55	200-240△/345-415Y	2.8△/1.6Y	47	-230	290	57	16
4JMD210 H16	60	0.63	220-275△/380-480Y	3.0△/1.7Y	57	-270	320	62	16

The performance curves of JMET blower is tested through below ways:
Under one atmospheric pressure, suck15℃ air and then you can calculate the data,of course allow 10% difference,and when the sucked air and surroundings temperature are not higher than 25℃,you still can get total pressure difference as the curves shows.