CX-75A

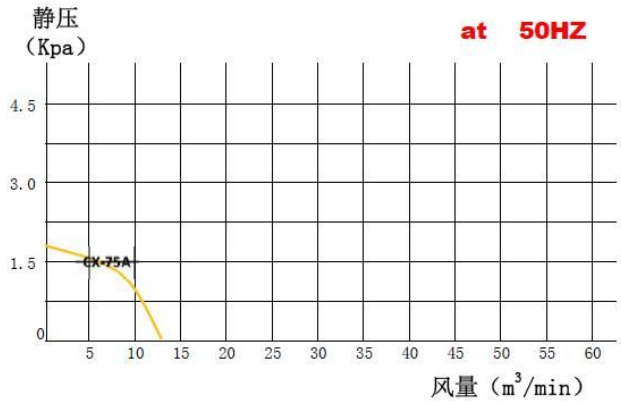

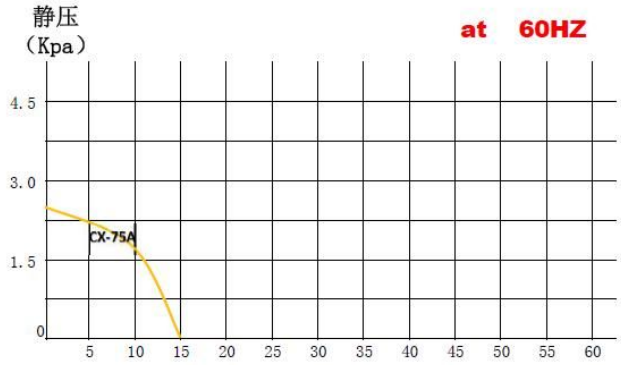

CX series

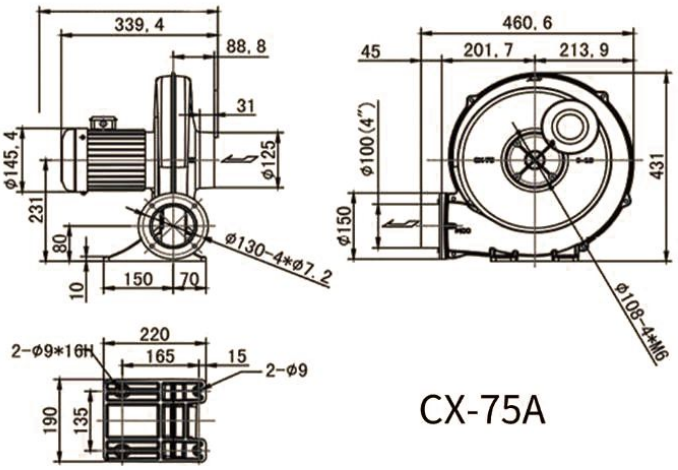

CX-75A

CX STRUCTURE DIAGRAM

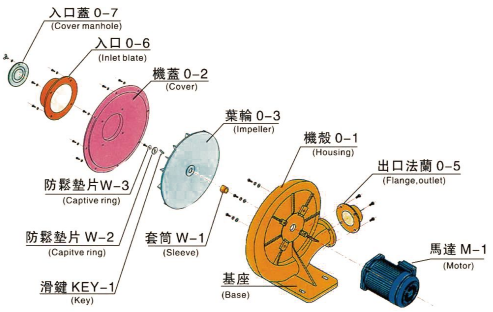

CX SERIES SPECIFICATION SHEET

风机型号 Type	相数 Phase	功率 Power（KW）	额定电压 Voltage（V）	额定电流 Current（A）	最大静压（吐出） Vacuum/Presure (max)（KPa）	最大风量（吐出） Air Flow（max） (m3/min)	出入口口径 In/Out（mm）	噪音 Noise Level（dB）	重量 Weight（Kg）
CX-65A	1 ~ 3 ~	0.2	220 220 / 380	1.5 1.1 / 0.9	0.7/1.1	4.5 / 5.3	IN 100 OUT 75	50/62	7
CX-75SA	1 ~ 3 ~	0.4	220 220 / 380	2.5 1.9 / 1.2	1.1/1.6	7/8	IN 100 OUT 75	56/70	11
CX-75A	1 ~ 3 ~	0.75	220 220 / 380	5 3/ 2.0	1.7/2.4	13/ 15	IN 125 OUT 100	64/80	14
CX-100A	1 ~ 3 ~	1.5	220 220 / 380	9 5.5/ 3.5	2/3	20/23	IN 125 OUT 100	74/90	28
CX-125A	3 ~	2.2	220 / 380	8/5	2.4/3.7	32/37	IN 252 OUT 125	76/95	38
CX-150A	3 ~	3.7	220 / 380	13 / 7.5	3.2/4.4	46/ 53	IN 252 OUT 150	80/100	54

The CX series medium-pressure blower developed by JMET can reach 4.5m3/min air flow through 0.2KW Her strength has won her numerous reputation and conquered countless users all over the world. JMET's cx series blower have also passed CCC/CE certification, so they can be used all over the world without any test.