CX-75SA

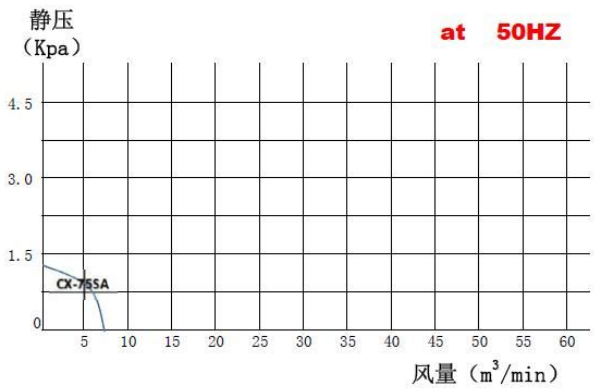

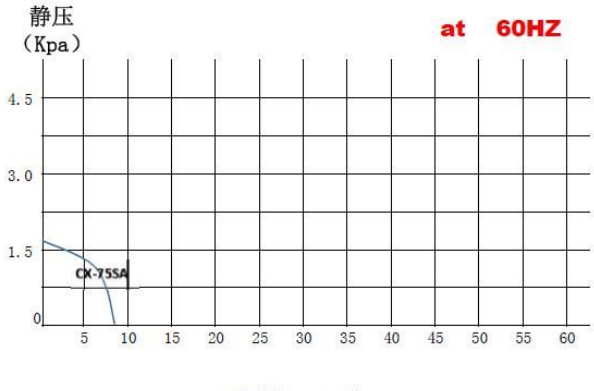

CX series

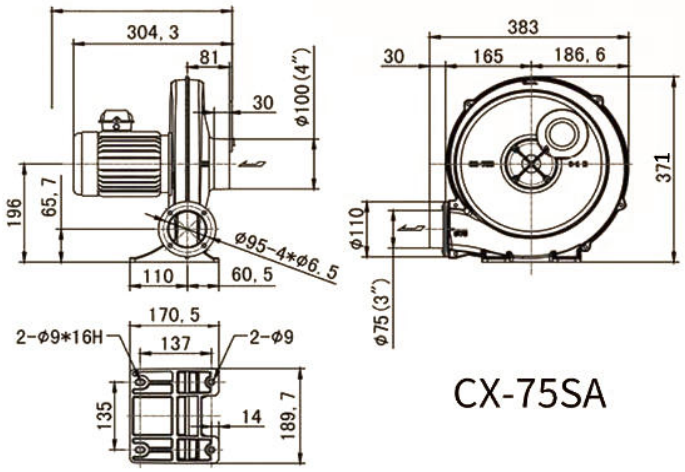

CX STRUCTURE DIAGRAM

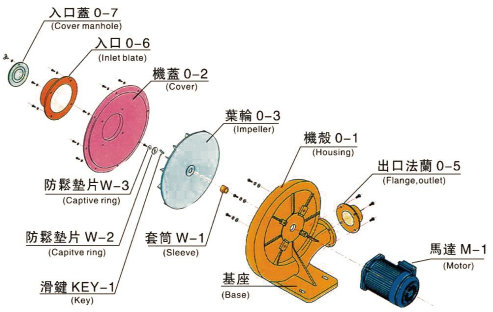

CX SERIES SPECIFICATION SHEET

风机型号 Type	相数 Phase	功率 Power（KW）	额定电压 Voltage（V）	额定电流 Current（A）	最大静压（吐出） Vacuum/Presure (max)（KPa）	最大风量（吐出） Air Flow（max） (m3/min)	出入口口径 In/Out（mm）	噪音 Noise Level（dB）	重量 Weight（Kg）
CX-65A	1 ~	0.2	220	1.5	0.7/1.1	4.5 / 5.3	IN 100	50/62	7
	3 ~		220 / 380	1.1 / 0.9			OUT 75		
CX-75SA	1 ~	0.4	220	2.5	1.1/1.6	7/8	IN 100	56/70	11
	3 ~		220 / 380	1.9 / 1.2			OUT 75		
CX-75A	1 ~	0.75	220	5	1.7/2.4	13/ 15	IN 125	64/80	14
	3 ~		220 / 380	3/ 2.0			OUT 100		
CX-100A	1 ~	1.5	220	9	2/3	20/23	IN 125	74/90	28
	3 ~		220 / 380	5.5/ 3.5			OUT 100		
CX-125A	3 ~	2.2	220 / 380	8/5	2.4/3.7	32/37	IN 252 OUT 125	76/95	38
CX-150A	3 ~	3.7	220 / 380	13 / 7.5	3.2/4.4	46/ 53	IN 252 OUT 150	80/100	54

The CX series medium-pressure blower developed by JMET can reach 4.5m3/min air flow through 0.2KW Her strength has won her numerous reputation and conquered countless users all over the world. JMET's cx series blower have also passed CCC/CE certification, so they can be used all over the world without any test.